REVISIONS				
ZONE	REV	DESCRIPTION	DATE	APPROVED
	B	REDRAWN	14AUG97	

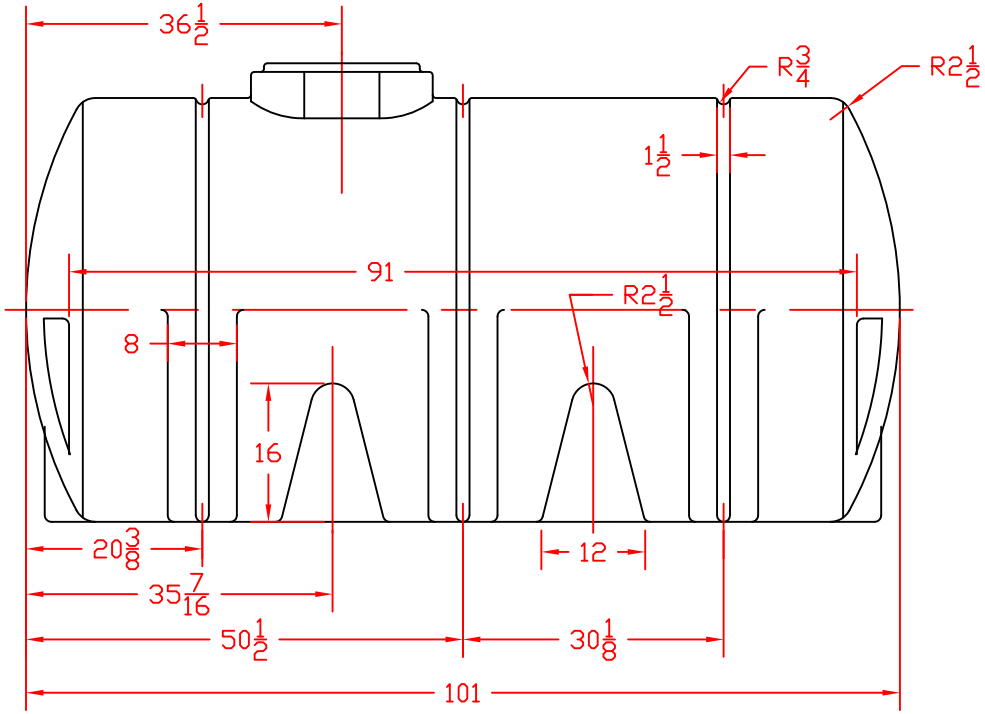

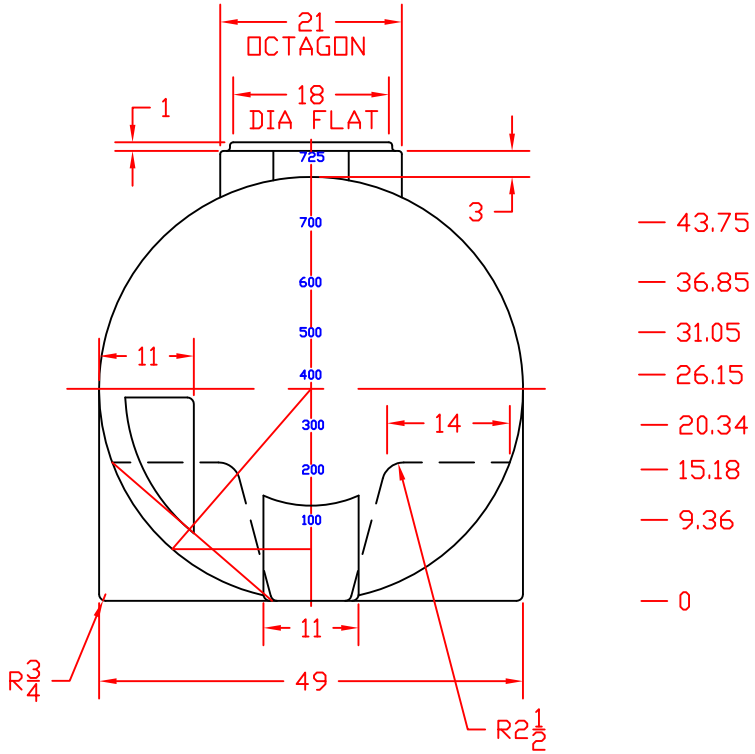

GALLON MARKS BOTH ENDS

NORWESCO
ST. BONIFACIUS, MN

725 GALLON HORIZONTAL LEG TANK

JTP 14AUG97	SIZE B	FSCM NO.	DWG NO. 40180	REV B
	SCALE 1/16		SHEET	